FLEETWOOD WINDOWS & DOORS

L. F. SCHMIDT LICENSE No. 43409 STATE OF FLORIDA PROFESSIONAL ENGINEER

Digitally signed by Lyndon F Schmidt
Date: 2026.07.06 14:18:27 -04'00'

This item has been digitally signed and sealed by **L. F. Schmidt, P.E.** on the date adjacent to the seal.

Printed copies of this document are not considered signed and sealed and the signature must be verified on any electronic copies.

THIS PRODUCT APPROVAL IS VALID ONLY FOR THE STATE OF FLORIDA

Series 3070-HI
Sliding Glass Door
w/ 60° or 135° Outside Corner
"IMPACT"

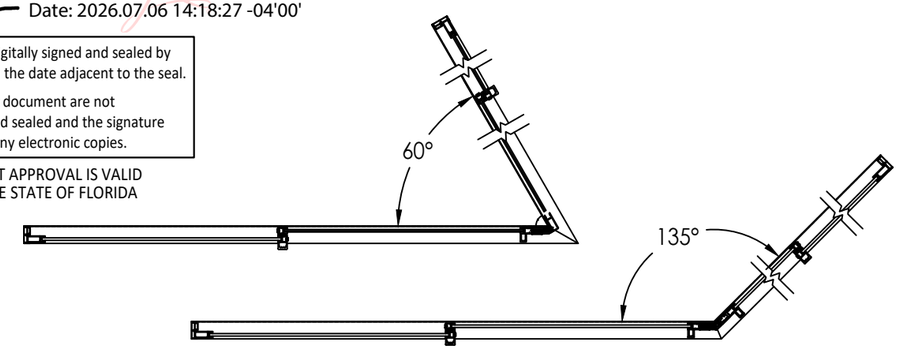

GENERAL NOTES

1. This product has been evaluated and is in compliance with the 9th Edition (2026) Florida Building Code (FBC) structural requirements including the "High Velocity Hurricane Zone" (HVHZ).
2. Product anchors shall be as listed and spaced as shown on details. Anchor embedment to base material shall be beyond wall dressing or stucco.
3. When used in the "HVHZ" this product complies with Section 1626 of the Florida Building Code and does not require an impact resistant covering.
4. When used in areas outside of the "HVHZ" requiring wind borne debris protection, this product complies with FBC Sections 1609.1.2 & R301.2.1.2 and does not require an impact resistant covering. This product meets missile level "D" and includes Wind Zone 4 as defined in ASTM E 1996 and FBC Sections 1609.1.2.2 & R301.2.1.2.1.
5. For 2x stud framing construction, anchoring of these units shall be the same as that shown for 2x buck masonry construction.
6. Site conditions that deviate from the details of this drawing require further engineering analysis by a licensed engineer or registered architect.
7. This product meets water infiltration requirements for "HVHZ".
8. Aluminum components, including fasteners, shall meet the requirements of FBC Section 2003.
9. Gaskets shall comply with FBC Section 2411.3.4.

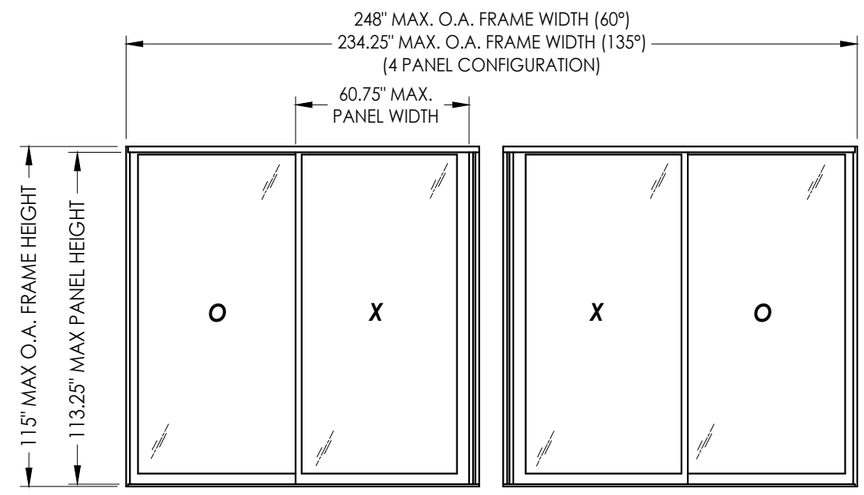

CORNER	MAX PANEL DIMENSION	MAX D.L.O. DIMENSION	GLASS TYPE	DESIGN PRESSURE (PSF)	
				POSITIVE	NEGATIVE
60°	60.75" X 113.25"	52.63" X 106.5"	G1, G2, G4	+55.0	-55.0
	60.75" X 98.25"	52.63" X 91.5"	G3	+55.0	-55.0
	51.12" X 113.25"	43.0" X 106.5"	G3	+55.0	-55.0
135°	60.75" X 113.25"	52.63" X 106.5"	G1, G2, G4	+53.3	-53.3
	60.75" X 98.25"	52.63" X 91.5"	G3	+53.3	-53.3
	51.12" X 113.25"	43.0" X 106.5"	G3	+53.3	-53.3

Note: 2 + 2 Panels shown, however, any combination of fixed and operable panels is allowed. There is not a limit on the number of panels.

TABLE OF CONTENTS

SHEET#	DESCRIPTION
1	Typical elevations, design pressures and general notes
2	Horizontal cross sections
3	Horizontal cross sections
4	Vertical cross sections
5	Buck anchoring
6	Frame anchoring
7	Components
8	Bill of materials and glazing details

Documents Prepared By:
Lyndon F. Schmidt
P.E. No. 43409

R.W. BUILDING CONSULTANTS, INC.
P.O. Box 230, Valrico, FL 33595
Phone No.: 813.659.9197
FBPE Registry No. 9813

PRODUCT: FLEETWOOD WINDOWS & DOORS

PART OR ASSEMBLY: TYPICAL ELEVATION, DESIGN PRESSURES & GENERAL NOTES

NO.	DATE	BY
7	7/02/26 UPDATE TO 9TH ED. (2026) FBC	LFS
6	7/12/23 UPDATE TO 8TH ED. (2023) FBC	LFS
5	8/10/20 UPDATE TO 7TH ED. (2020) FBC	DAC

REVISIONS

DATE: 04/30/12
SCALE: N.T.S.
DWG. BY: JK
CHK. BY: LFS
DRAWING NO.: FL-15560.5
SHEET 1 OF 8

© 2012 R.W. Building Consultants Inc.

Z:\2023 FBC Drawings\Fleetwood Windows & Doors\FL-15560 R15 Sliding Patio Door\FL-15560.1-.5.dwg

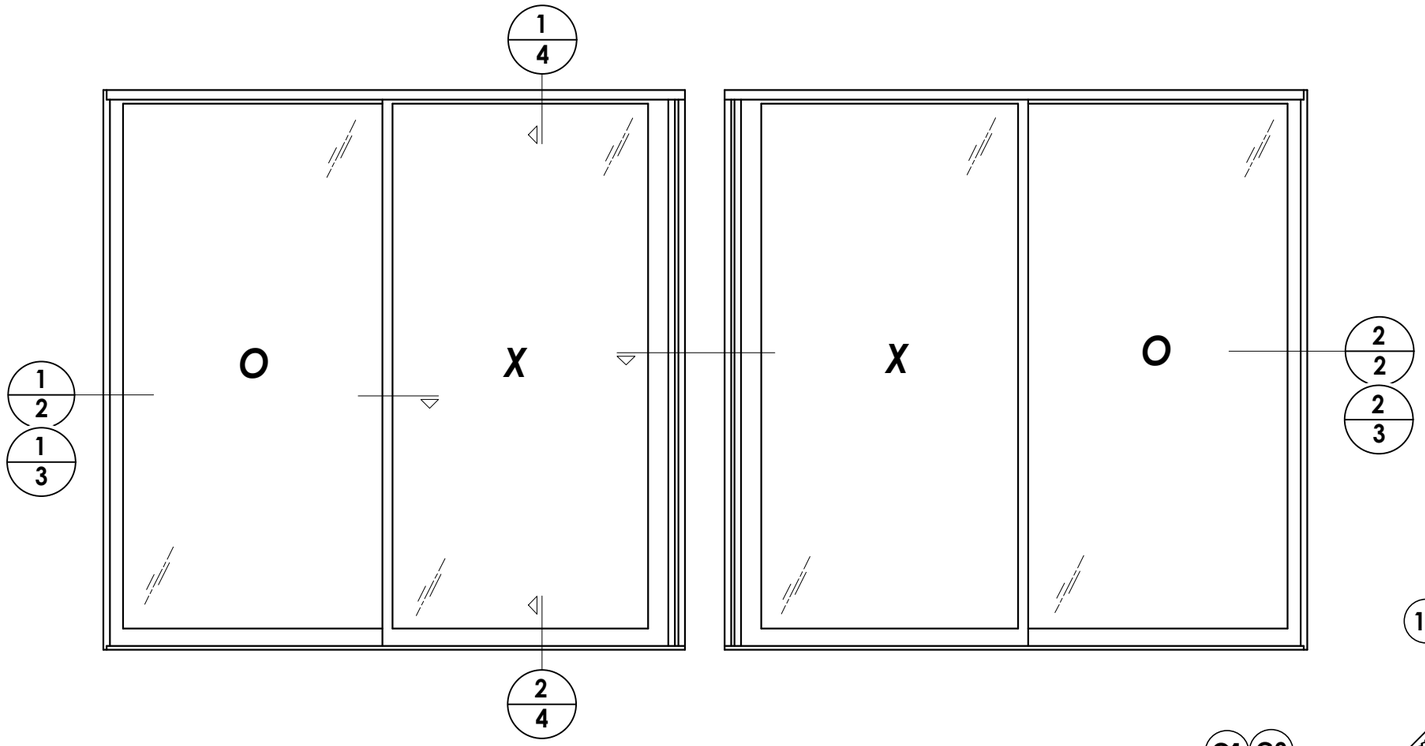

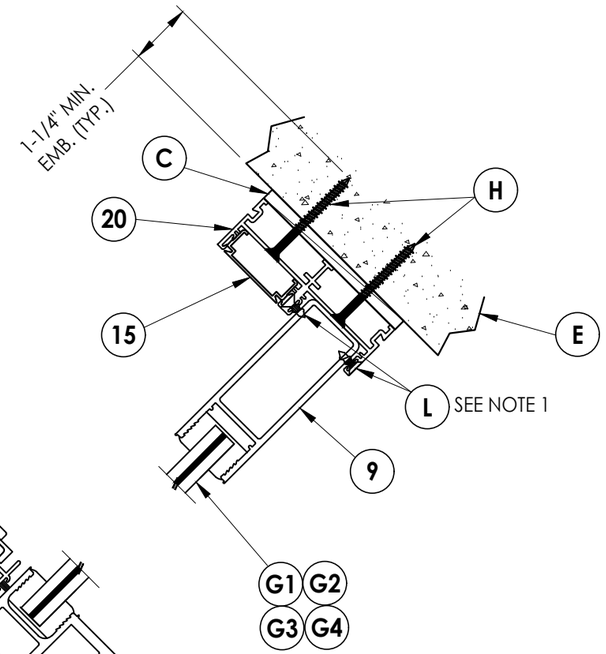

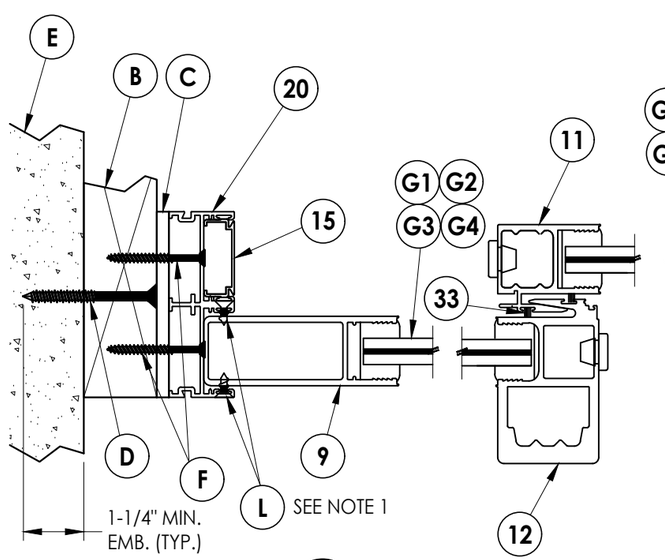

1/2 **HORIZONTAL CROSS SECTION**
2X Buck Construction

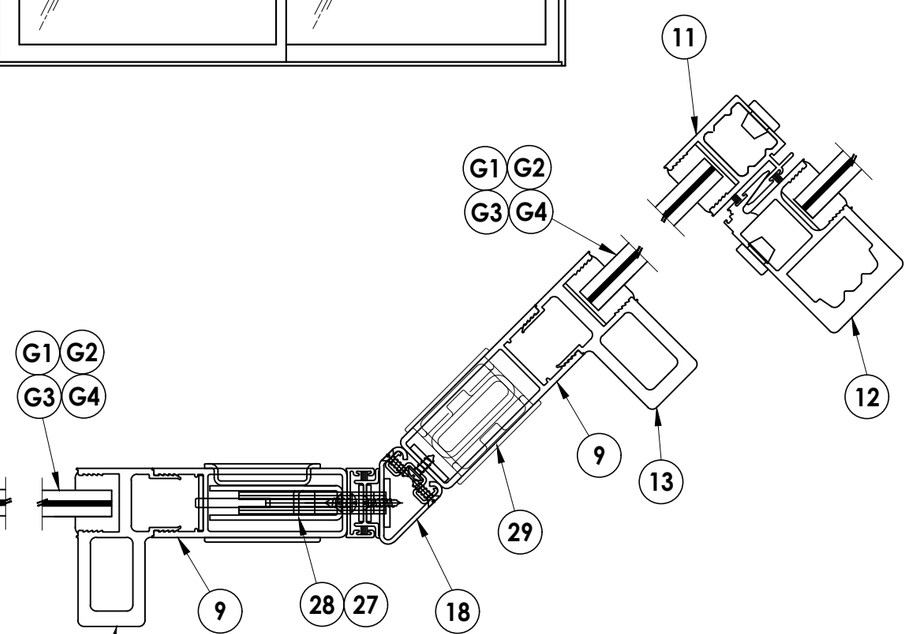

2/2 **HORIZONTAL CROSS SECTION**
135° Corner - Direct to Masonry

NOTE:
1. Fixed panel screws located 39" from each end.

Z:\2023 FBC Drawings\Fleetwood Windows & Doors\FL-15560 R15 Sliding Patio Door\FL-15560.1-.5.dwg

Documents Prepared By:
Lyndon F. Schmidt
P.E. No. 43409

RW BUILDING CONSULTANTS, INC.
P.O. Box 230, Valrico, FL 33595
Phone No.: 813.659.9197
FBPE Registry No. 9813

PRODUCT: FLEETWOOD WINDOWS & DOORS

PART OR ASSEMBLY: HORIZONTAL CROSS SECTIONS

NO.	DATE	BY
7	7/02/26 UPDATE TO 9TH ED. (2026) FBC	LFS
6	7/12/23 UPDATE TO 8TH ED. (2023) FBC	LFS
5	8/10/20 UPDATE TO 7TH ED. (2020) FBC	DAC

REVISIONS

DATE: 04/30/12
SCALE: N.T.S.
DWG. BY: JK
CHK. BY: LFS
DRAWING NO.: FL-15560.5
SHEET 2 OF 8

© 2012 R.W. Building Consultants Inc.

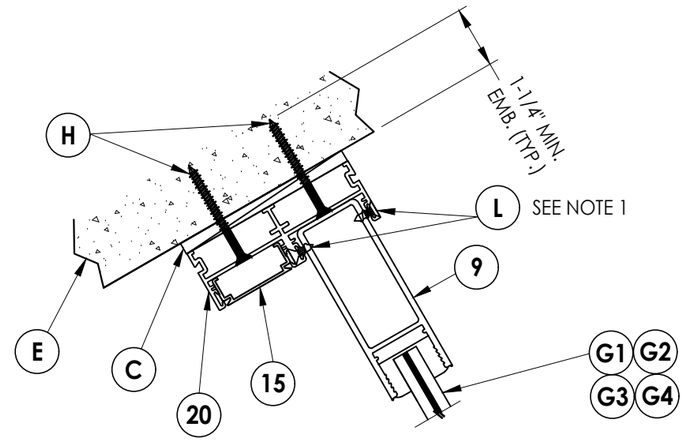

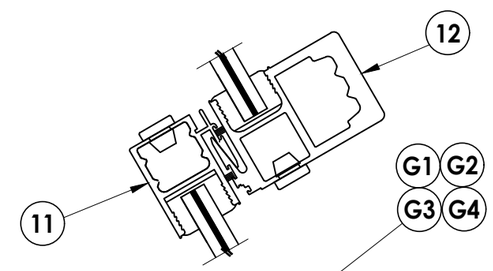

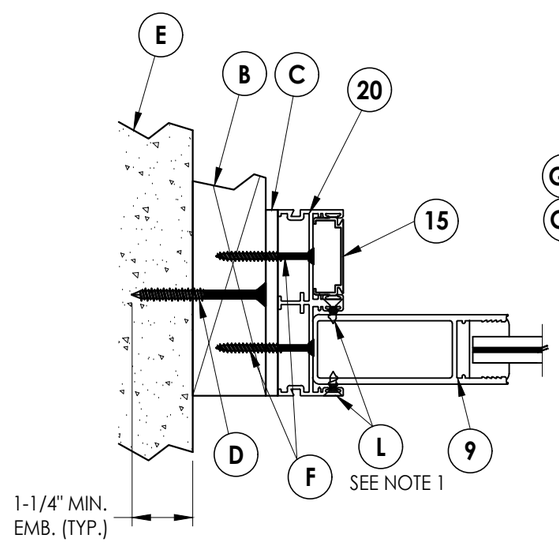

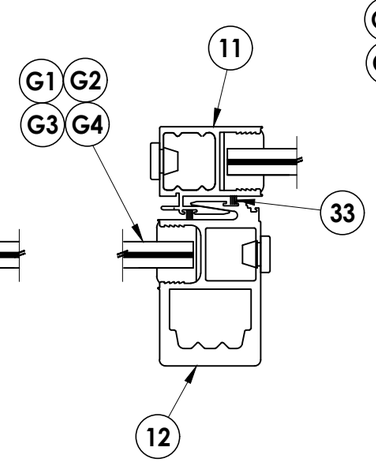

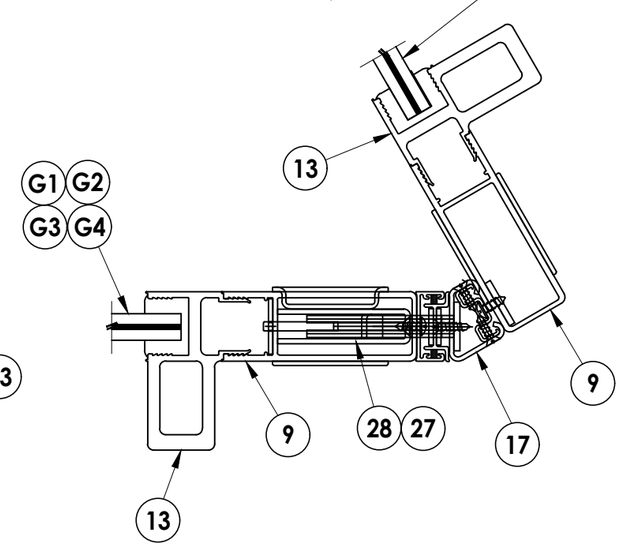

1/3 HORIZONTAL CROSS SECTION
2X Buck Construction

2/3 HORIZONTAL CROSS SECTION
60° Corner - Direct to Masonry

NOTE:
1. Fixed panel screws located 39" from each end.

Documents Prepared By:
Lyndon F. Schmidt
P.E. No. 43409

RW BUILDING CONSULTANTS, INC.
P.O. Box 230, Valrico, FL 33595
Phone No.: 813.659.9197
FBPE Registry No. 9813

PRODUCT: *FLEETWOOD WINDOWS & DOORS*

PART OR ASSEMBLY: *HORIZONTAL CROSS SECTIONS*

REVISIONS

NO.	DATE		BY
7	7/02/26	UPDATE TO 9TH ED. (2026) FBC	LFS
6	7/12/23	UPDATE TO 8TH ED. (2023) FBC	LFS
5	8/10/20	UPDATE TO 7TH ED. (2020) FBC	DAC

DATE: 04/30/12
SCALE: N.T.S.
DWG. BY: JK
CHK. BY: LFS
DRAWING NO.: FL-15560.5
SHEET 3 OF 8

© 2012 R.W. BUILDING CONSULTANTS INC.

Z:\2023 FBC Drawings\Fleetwood Windows & Doors\FL-15560 R15 Sliding Patio Door\FL-15560.1-.5.dwg

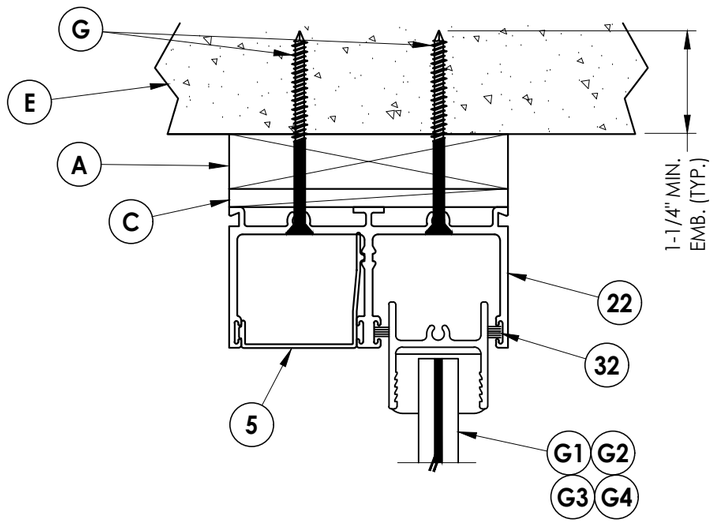

1/4 VERTICAL CROSS SECTION
1X Buck Construction

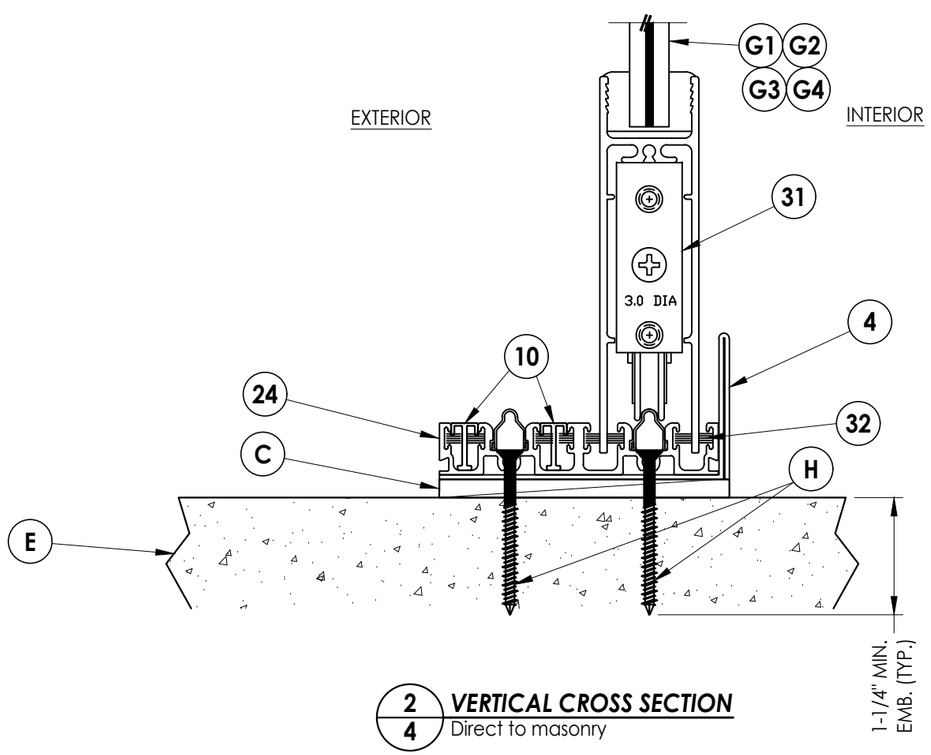

2/4 VERTICAL CROSS SECTION
Direct to masonry

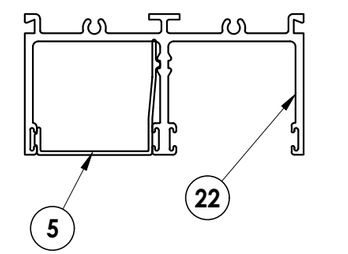

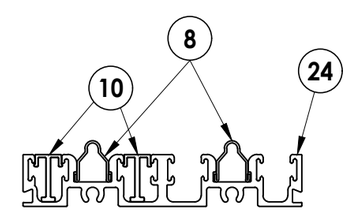

HEAD & SILL COVER CONDITION

NOTE:
1. A full-depth cut-out (1" wide x 3/16" tall) in track base is necessary to allow for water drainage (12" from each end and 24" o.c.).

Documents Prepared By:
Lyndon F. Schmidt
P.E. No. 43409

RW BUILDING CONSULTANTS, INC.
P.O. Box 230, Valrico, FL 33595
Phone No.: 813.659.9197
FBPE Registry No. 9813

PRODUCT: FLEETWOOD WINDOWS & DOORS

PART OR ASSEMBLY: VERTICAL CROSS SECTIONS

NO.	DATE	REVISIONS	BY
7	7/02/26	UPDATE TO 9TH ED. (2026) FBC	LFS
6	7/12/23	UPDATE TO 8TH ED. (2023) FBC	LFS
5	8/10/20	UPDATE TO 7TH ED. (2020) FBC	DAC

DATE: 04/30/12
SCALE: N.T.S.
DWG. BY: JK
CHK. BY: LFS
DRAWING NO.: FL-15560.5
SHEET 4 OF 8

© 2012 R.W. Building Consultants Inc.

Z:\2023 FBC Drawings\Fleetwood Windows & Doors\FL-15560 R15 Sliding Patio Door\FL-15560.1-.5.dwg

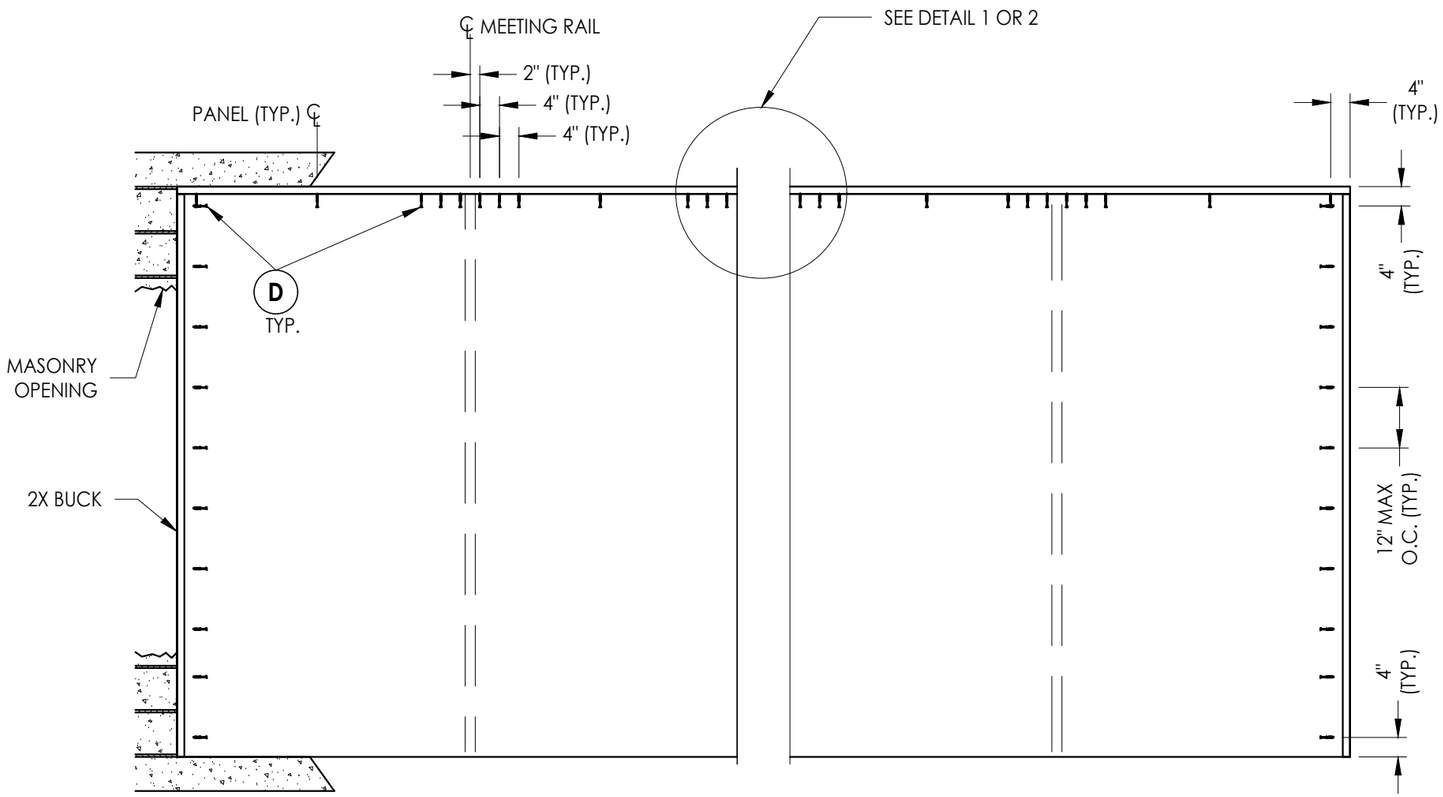

2X BUCK ANCHORING

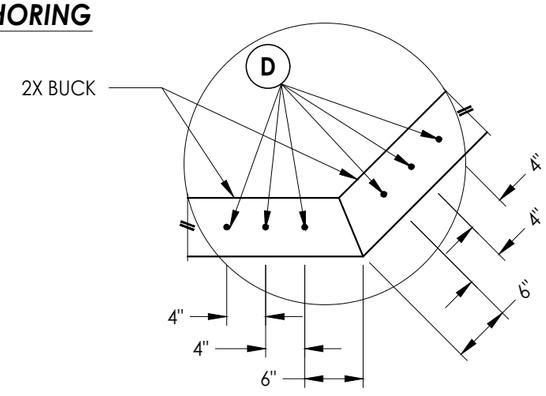

DETAIL 1
135° Corner

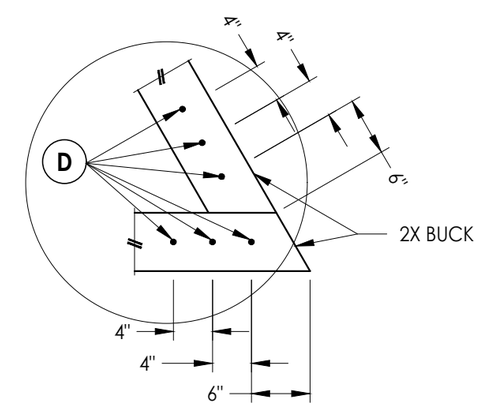

DETAIL 2
60° Corner

CONCRETE ANCHOR NOTES:

1. *Concrete anchor locations at the corners may be adjusted to maintain the min. edge distance to mortar joints.*
2. *Concrete anchor locations noted as "MAX. ON CENTER" must be adjusted to maintain the min. edge distance to mortar joints, additional concrete anchors may be required to ensure the "MAX. ON CENTER" dimension are not exceeded.*
3. *Concrete anchor table:*

ANCHOR TYPE	ANCHOR SIZE	MIN. EMBEDMENT	MIN. CLEARANCE TO MASONRY EDGE	MIN. CLEARANCE TO ADJACENT ANCHOR
ITW TAPCON®	1/4"	1-1/4"	2"	4"
DeWALT ULTRACON+®	1/4"	1-1/4"	2-1/2"	4"

Documents Prepared By:
Lyndon F. Schmidt
P.E. No. 43409
RW BUILDING CONSULTANTS, INC.
P.O. Box 230, Valrico, FL 33595
Phone No.: 813.659.9197
FBPE Registry No. 9813

PRODUCT: *FLEETWOOD WINDOWS & DOORS*

PART OR ASSEMBLY: *BUCK ANCHORING*

REVISIONS

NO.	DATE		BY
7	7/02/26	UPDATE TO 9TH ED. (2026) FBC	LFS
6	7/12/23	UPDATE TO 8TH ED. (2023) FBC	LFS
5	8/10/20	UPDATE TO 7TH ED. (2020) FBC	DAC

DATE: 04/30/12
SCALE: N.T.S.
DWG. BY: JK
CHK. BY: LFS
DRAWING NO.: FL-15560.5
SHEET 5 OF 8

© 2012 R.W. BUILDING CONSULTANTS INC.

Z:\2023 FBC Drawings\Fleetwood Windows & Doors\FL-15560 R15 Sliding Patio Door\FL-15560.1-.5.dwg

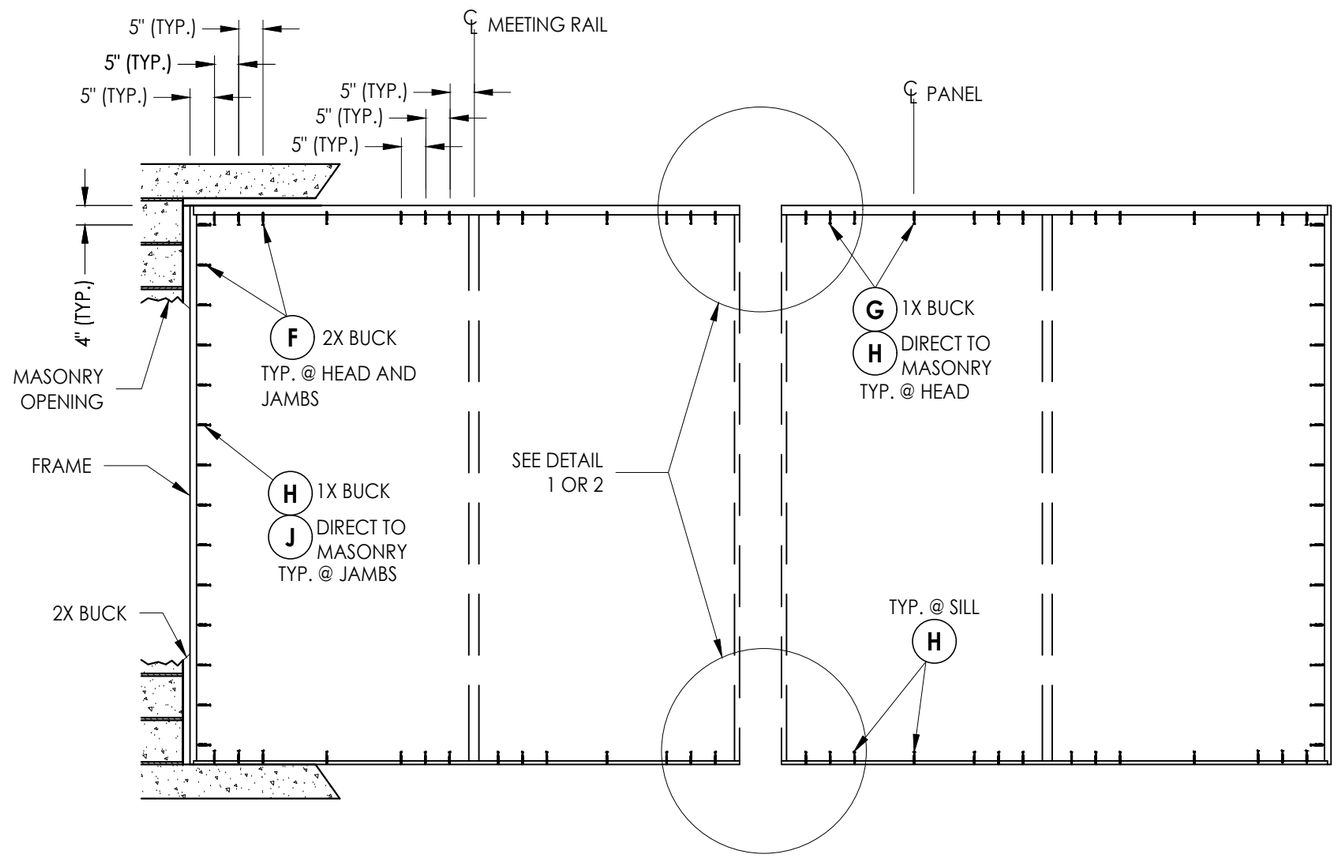

FRAME ANCHORING

(NOTE: 1 ANCHOR REQUIRED PER TRACK @ EACH LOCATION)

CONCRETE ANCHOR NOTES:

1. *Concrete anchor locations at the corners may be adjusted to maintain the min. edge distance to mortar joints.*
2. *Concrete anchor locations noted as "MAX. ON CENTER" must be adjusted to maintain the min. edge distance to mortar joints, additional concrete anchors may be required to ensure the "MAX. ON CENTER" dimension are not exceeded.*
3. *Concrete anchor table:*

ANCHOR TYPE	ANCHOR SIZE	MIN. EMBEDMENT	MIN. CLEARANCE TO MASONRY EDGE	MIN. CLEARANCE TO ADJACENT ANCHOR
ITW TAPCON®	3/16"	1-1/4"	2"	1-7/8"

WOOD SCREW INSTALLATION NOTES:

1. *Maintain a minimum 3/4" edge distance, 1" end distance, & 1" o.c. spacing of wood screws to prevent the splitting of wood.*

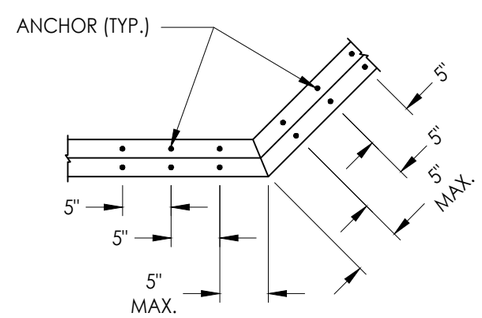

DETAIL 1

135° Corner

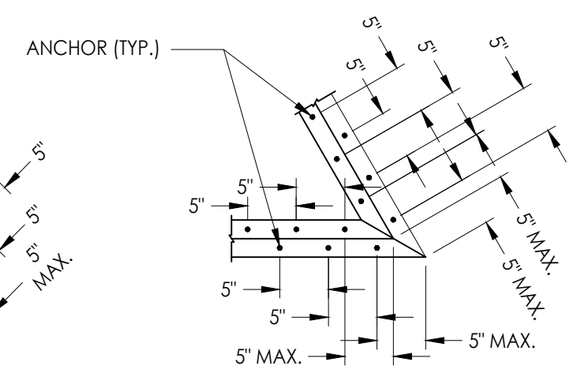

DETAIL 2

60° Corner

Documents Prepared By:
Lyndon F. Schmidt
P.E. No. 43409

RW BUILDING CONSULTANTS, INC.
P.O. Box 230, Valrico, FL 33595
Phone No.: 813.659.9197
FBPE Registry No. 9813

PRODUCT: *FLEETWOOD WINDOWS & DOORS*

PART OR ASSEMBLY: *FRAME ANCHORING*

REVISIONS

NO.	DATE	BY
7	7/02/26 UPDATE TO 9TH ED. (2026) FBC	LFS
6	7/12/23 UPDATE TO 8TH ED. (2023) FBC	LFS
5	8/10/20 UPDATE TO 7TH ED. (2020) FBC	DAC

DATE: 04/30/12
SCALE: N.T.S.
DWG. BY: JK
CHK. BY: LFS
DRAWING NO.: FL-15560.5
SHEET 6 OF 8

© 2012 R.W. Building Consultants Inc.

Z:\2023 FBC Drawings\Fleetwood Windows & Doors\FL-15560 R15 Sliding Patio Door\FL-15560.1-.5.dwg

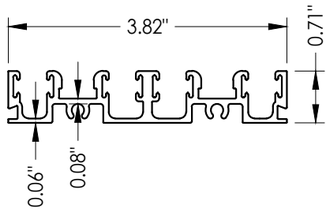

2 SILL TRACK
2 Runs

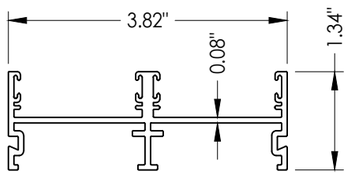

20 JAMB TRACK
2 Runs

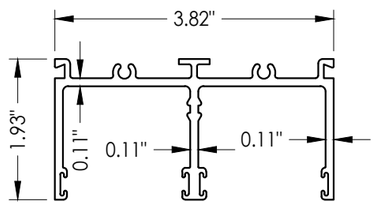

22 HEAD TRACK
2 Runs

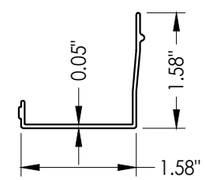

5 HEAD CHANNEL FILLER

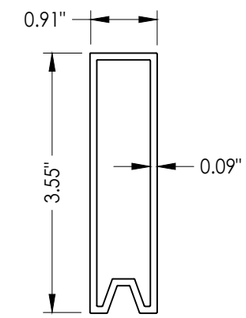

30 PANEL SETTING BLOCK

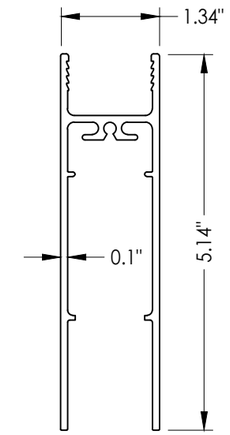

7 BOTTOM RAIL

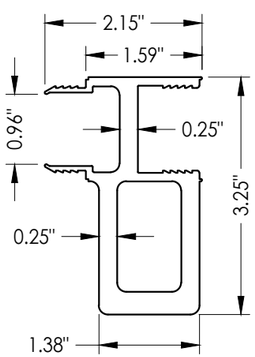

13 WINDLOAD ADAPTER

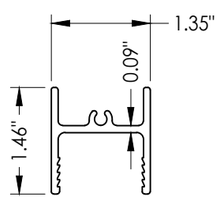

6 TOP RAIL

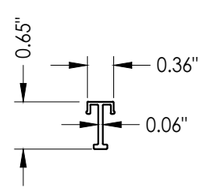

10 SILL CHANNEL FILLER

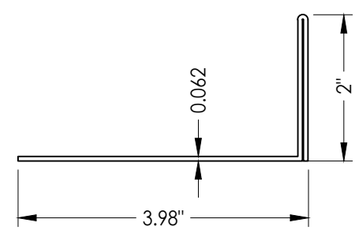

4 SILL PAN

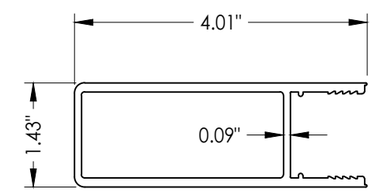

9 STILE

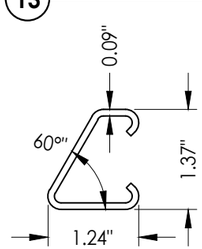

17 60° YOKE

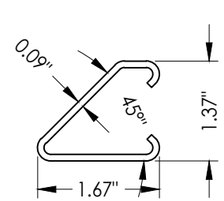

18 135° YOKE

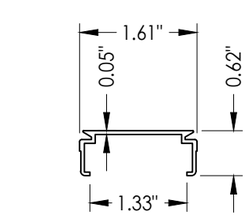

15 JAMB CHANNEL FILLER

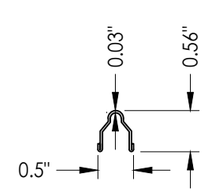

8 TRACK

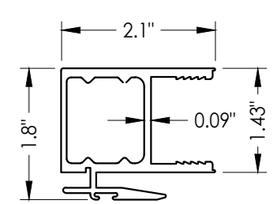

11 INTERLOCK STILE
Standard

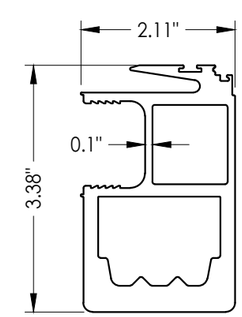

12 INTERLOCK STILE
High Performance

Documents Prepared By:
Lyndon F. Schmidt
P.E. No. 43409

RW BUILDING CONSULTANTS, INC.
P.O. Box 230, Valrico, FL 33595
Phone No.: 813.659.9197
FBPE Registry No. 9813

PRODUCT: FLEETWOOD WINDOWS & DOORS

PART OR ASSEMBLY: COMPONENTS

NO.	DATE	BY
7	7/02/26 UPDATE TO 9TH ED. (2026) FBC	LFS
6	7/12/23 UPDATE TO 8TH ED. (2023) FBC	LFS
5	8/10/20 UPDATE TO 7TH ED. (2020) FBC	DAC

REVISIONS

DATE: 04/30/12
SCALE: N.T.S.
DWG. BY: JK
CHK. BY: LFS
DRAWING NO.: FL-15560.5
SHEET 7 OF 8

© 2012 R.W. Building Consultants Inc.

Z:\2023 FBC Drawings\Fleetwood Windows & Doors\FL-15560 R15 Sliding Patio Door\FL-15560.1-.5.dwg

BILL OF MATERIALS

ITEM #	DESCRIPTION	MATERIAL
A	1X BUCK SG >= 0.55	WOOD
B	2X BUCK SG >= 0.55	WOOD
C	1/4" MAX. SHIM SPACE	-
D	1/4" X 2-3/4" DeWALT OR ITW PFH CONCRETE SCREW	STEEL
E	MASONRY - 3,000 PSI MIN. CONCRETE CONFORMING TO ACI 301 OR HOLLOW BLOCK CONFORMING TO ASTM C90	CONCRETE
F	#10 X 2" PFH SMS (1" MIN. EMBEDMENT)	STEEL
G	3/16" X 2-3/4" ITW PFH CONCRETE SCREW	STEEL
H	3/16" X 2-1/4" ITW PFH CONCRETE SCREW	STEEL
J	3/16" X 3-1/4" ITW PFH CONCRETE SCREW	STEEL
L	#8 X 1/2" PFH SMS	STEEL
4	SILL PAN (2 RUNS)	5052 -ALUM
5	HEAD CHANNEL FILLER	6063-T6 ALUM
6	TOP RAIL	6063-T6 ALUM
7	BOTTOM RAIL	6063-T6 ALUM
8	TRACK	S.S.
9	STILE	6063-T6 ALUM
10	SILL CHANNEL FILLER	6063-T6 ALUM
11	STANDARD INTERLOCK STILE	6063-T6 ALUM
12	HIGH PERFORMANCE INTERLOCK STILE	6063-T6 ALUM
13	WINDLOAD ADAPTER	6063-T6 ALUM
15	JAMB CHANNEL FILLER	6063-T6 ALUM
17	60° YOKE	6063-T6 ALUM
18	135° YOKE	6063-T6 ALUM
20	JAMB TRACK (2 RUNS)	6063-T6 ALUM
22	HEAD TRACK (2 RUNS)	6063-T6 ALUM
24	SILL TRACK (2 RUNS)	6063-T6 ALUM
26	#8 X 3/4" PPH SMS	STEEL
27	PRIMARY LATCH	-
28	SECONDARY LATCH	-
29	HANDLE SET	-
30	PANEL SETTING BLOCK	6063-T6 ALUM
31	MAMMOTH ROLLER ASSEMBLY	-
32	CENTER-FIN WEATHERSEAL .290 HIGH PILE (AMESBURY 43629-270)	-
33	HEAVY DENSITY WEATHERSEAL .300 HIGH PILE (AMESBURY 413330-270)	-

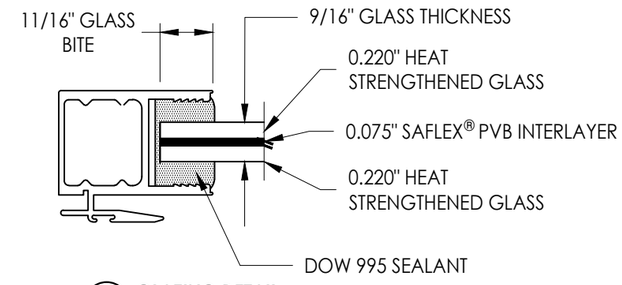

G1 GLAZING DETAIL
StormGlass™ by Oldcastle Glass

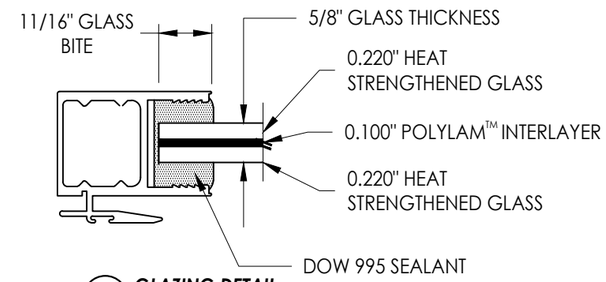

G2 GLAZING DETAIL
Safety-Plus II by Glasslam

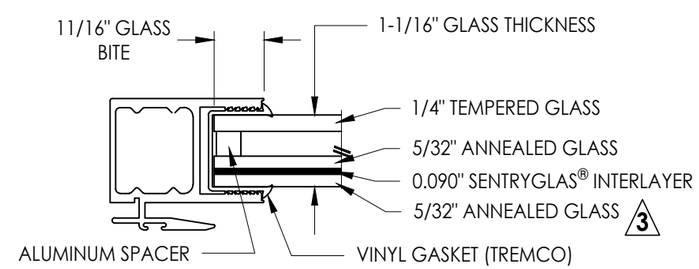

G3 GLAZING DETAIL
Dry Seal

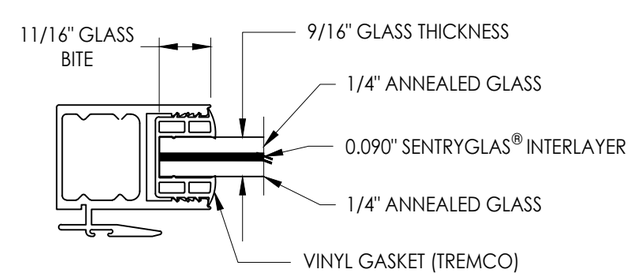

G4 GLAZING DETAIL
Dry Seal

NOTE: GLAZING > 36" WIDE REQUIRES AT LEAST TWO (2) SETTING BLOCKS CONFORMING TO FBC SECTION 2411.3.3.1.

Documents Prepared By:
Lyndon F. Schmidt
P.E. No. 43409

RW BUILDING CONSULTANTS, INC.
P.O. Box 230, Valrico, FL 33595
Phone No.: 813.659.9197
FBPE Registry No. 9813

PRODUCT: FLEETWOOD WINDOWS & DOORS

PART OR ASSEMBLY: BILL OF MATERIALS AND GLAZING DETAILS

REVISIONS

NO.	DATE		BY
7	7/02/26	UPDATE TO 9TH ED. (2026) FBC	LFS
6	7/12/23	UPDATE TO 8TH ED. (2023) FBC	LFS
5	8/10/20	UPDATE TO 7TH ED. (2020) FBC	DAC

DATE: 04/30/12
SCALE: N.T.S.
DWG. BY: JK
CHK. BY: LFS
DRAWING NO.: FL-15560.5
SHEET 8 OF 8

© 2012 R.W. Building Consultants Inc.

Z:\2023 FBC Drawings\Fleetwood Windows & Doors\FL-15560 R15 Sliding Patio Door\FL-15560.1-.5.dwg